Revision:	Changes:	Date:
1.0	Initial Case	2026.02.10

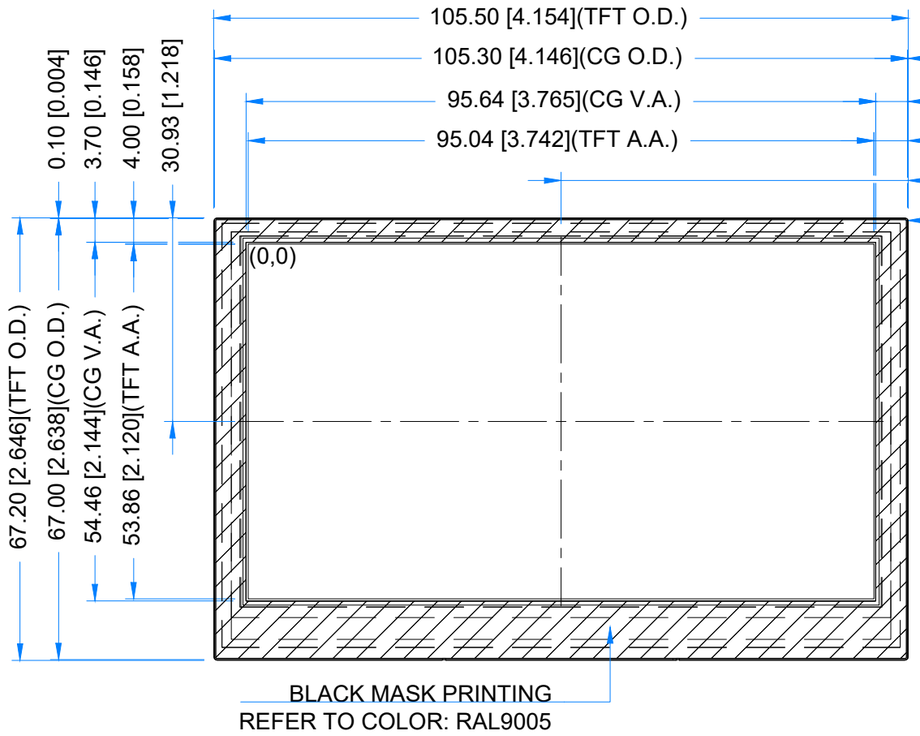

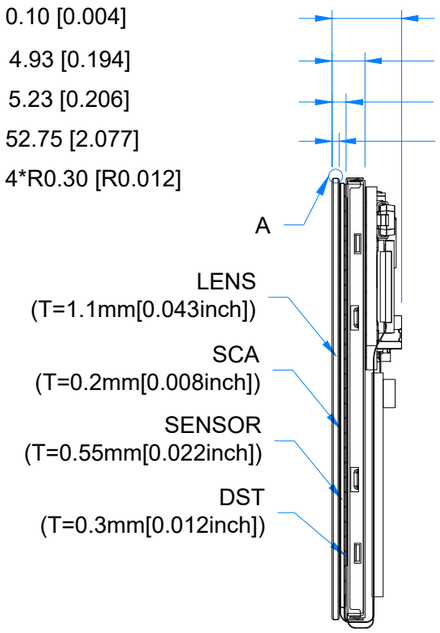

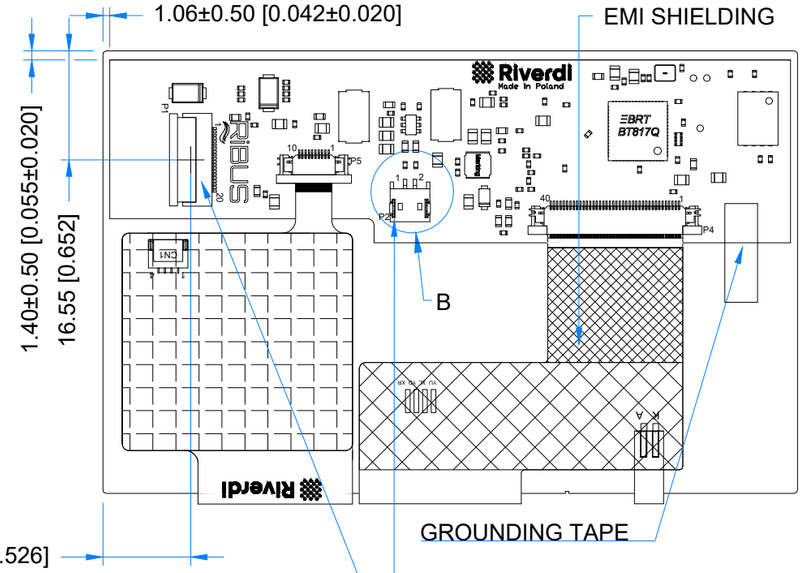

DETAIL A
SCALE 4:1

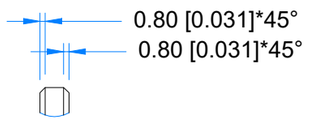

DETAIL B
SCALE 4:1

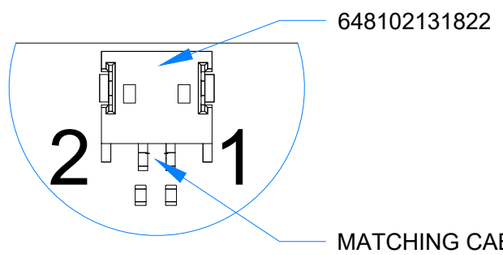

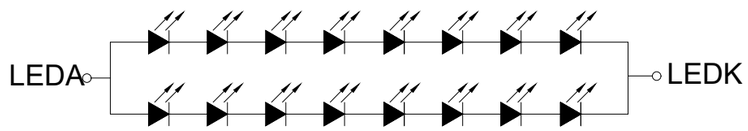

LED Diagram Circuit

PINOUT ON THE 2ND PAGE

TFT NOTES:
1. DISPLAY TYPE: TRANSMISSIVE, NORMALLY BLACK, IPS
2. RESOLUTION: 480x272
3. VIEWING ANGLE: FREE
4. INTERFACE: SPI/QSPI
5. DRIVER IC ON THE BOARD: BT817Q
6. SUPPLY VOLTAGE FOR MODULE: 3.3V
7. SUPPLY VOLTAGE FOR BACKLIGHT: 5.0V, BUIILT-IN LED DRIVER

TP NOTES:
1. TP STRUCTURE: G+G
2. CG THICKNESS: 1.1mm[0.043inch]
3. DRIVER IC: ILI2132A
4. SURFACE HARDNESS:7H
5. INTERFACE: SPI/QSPI VIA RIBUS AND BT817Q

GENERAL NOTES:
1. SURFACE LUMINANCE: 800cd/m^2
2. OPERATING TEMPERATURE: -20°C ~ 70°C
3. STORAGE TEMPERATURE: -30°C ~ 80°C
4. WITHOUT INDIVIDUAL TOLERANCE: ±0.3mm
5. RoHS COMPLIANT

PN: RVT43HLBNWCA0 V2.0A				Riverdi
SN:				
DRAWN:	M.Stabinski	2026.02.10	1:0.93	
CHECKED:	M.Wierzbowski	2026.02.10	[mm]	
APPR:	M.Wierzbowski	2026.02.10	ISO A3	P. 1 of 1

P1-RIBUS CONNECTOR			
Pin No.	Desc.	Pin No.	Desc.
1	VDD	11	GPIO.1/IO.2
2	GND	12	GPIO.2/IO.3
3	SPI_SCLK	13	NC
4	MISO/IO.1	14	NC
5	MOSI/IO.0	15	NC
6	CS	16	NC
7	INT	17	BLVDD
8	RST/PD	18	BLVDD
9	GPIO.0	19	BLGND
10	DISP_AUDIO	20	BLGND

P2-LOUDSPEAKER OUTPUT CONNECTOR			
Pin No.	Desc.	Pin No.	Desc.
1	SPEAKER+	2	SPEAKER-